Allen County Ohio

Stephen M. Kayatin, P.E.
Sanitary Engineer

Sanitary Engineering Department

3230 N. Cole Street, Lima, Ohio 45801
Tel: (419) 996-4670 ♦ Fax: (419) 229-3297
Website: http://www.allencountyohio.com/sanitary-engineering/

LOW PRESSURE PUMP SYSTEM
WHEN YOU NEED TO CALL FOR INSPECTIONS

1. The E-One pump station must be inspected before it is backfilled. Call the Sanitary Engineering Department at least **24 hours prior** to when the inspection is needed *(ballast must be exposed to ensure it is properly anchored in concrete).*

2. Service lateral/force main must be inspected before backfill. Call the Sanitary Engineering Department at least **24 hours prior** to when the inspection is needed.

3. The E-One pump station electrical work must be inspected by the Sanitary Engineering Department. Call the Sanitary Engineering Department at least **24 hours prior** to when the inspection is needed.

4. The Sanitary Engineering Department will make the hot-tap on the low-pressure sewer main once the main is properly exposed. Call the Sanitary Engineering Department **48 hours prior** to when the hot-tap is needed. **Steps 1, 2, and 3 must be completed and inspected before our department will perform a hot-tap.**

5. The E-One pump station must be started up by the Sanitary Engineering Department after the electrical work is inspected and approved. Call the Sanitary Engineering Department at least **24 hours prior** to when the start-up is needed.

*E-One pump may be picked up from ACSE Department between 7:30a.m. and 3:30p.m. Monday-Friday. Please call ahead so it will be ready for pickup.

**No work will be approved by the Sanitary Engineering Department without a permit being obtained from our office prior to any sanitary sewer related work being done.

Allen County Ohio

Stephen M. Kayatin, P.E.
Sanitary Engineer

Sanitary Engineering Department

3230 N. Cole Street, Lima, Ohio 45801
Tel: (419) 996-4670 ♦ Fax: (419) 229-3297
Website: http://www.allencountyohio.com/sanitary-engineering/

INSTALLATION
REQUIREMENTS FOR
LOW PRESSURE PUMP SYSTEM
SINGLE FAMILY RESIDENCE

See Drawing GPD 1.0

1. House lateral to be 4" Sch 40 PVC
   ASTM D 1785 - PVC Sch 40 pressure rated
   ASTM D 2665 – PVC Drain, Waste and
   Vent Pipe

2. Electric service to be 240v / 1ph / 60 Hz to the pump location.

3. Builder to contact Allen County Sanitary Engineering Department 48 hours or 2 working days before work to schedule.

4. When ordering, the Builder is to determine:
   a. Depth of cover over 4" inlet sewer.
   b. Length of type TC direct-bury cable required between pump unit and alarm panel.

5. Bill of Materials:
   a. E-One Model DH071 pump unit. 4" inlet for 4" Sch 40 PVC pipe
      1 ¼" female NPT threaded outlet
   b. MOD-250-1 alarm panel
   c. 30amp fused disconnect (#10AWG-4 wire:2 pwr, neutral, & ground)
   d. Type TC direct bury electric cable to service pumps
   e. 1¼" x 1¼" Stainless Steel bushings
   f. 1¼" DR 11 HDPE (green stripe or solid green pipe) for discharge force main
   g. Service Lateral Kit for 1¼" SDR 11 HDPE Pipe Valve Box to be plastic
   h. Copperhead #12 solid green tracer wire or equal installed with1¼" force main between the pump and the pressure main.
   i. Corporation stop with corporation saddle provided by ACSE Department
   j. E-One Pump Station purchased through ACSE Department at the time a permit is obtained. Call 419-996-4670 for pricing information.
6. Pump Start-up
   a. Electrical work to be completed before pump start-up can be scheduled.*
      Refer to diagram inside E-1 panel
   b. ACSE Department to initiate and complete the start-up of the pump installation.

7. Easement to be granted to ACSE Department by property owner for operation and maintenance of pump station and electrical.

CAUTION: DO NOT ALTER PANEL OR ANY PART OF THE TANK OR COMPONENTS

DH071

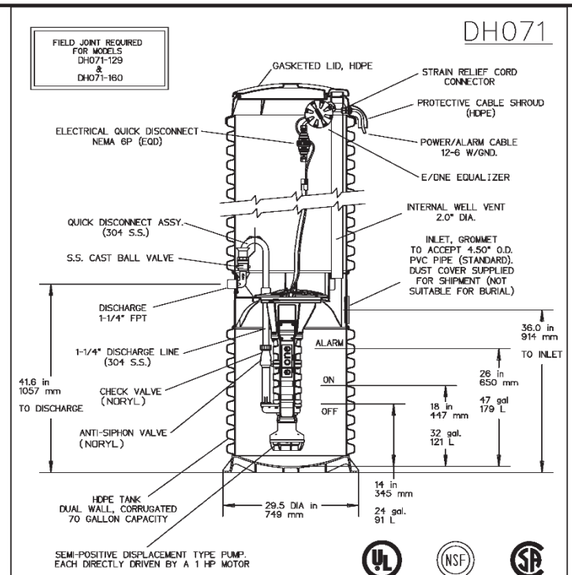

BALLAST REQUIREMENTS

A CONCRETE ANCHOR IS REQUIRED ON ALL OUTDOOR MODEL DH071 STATIONS

PRE-CAST CONCRETE BALLAST PROVIDED

SEE INSTALLATION INSTRUCTIONS FOR FURTHER DETAILS

NOTE: DIMENSIONS ARE FOR REF ONLY

AD	CH	10/20/10	D	
DR BY	CHK'D	DATE	ISSUE	SCALE

e/one SEWER SYSTEMS

MODEL DH071 DETAIL SHEET

NA0050P02

DH071-93

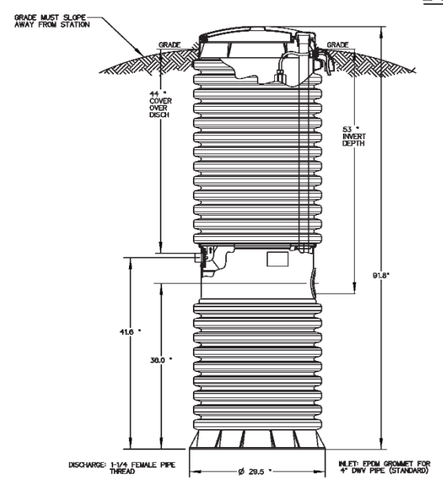

BALLAST REQUIREMENTS

A CONCRETE ANCHOR IS REQUIRED ON ALL MODEL DH071-93 STATIONS

PRE-CAST CONCRETE BALLAST PROVIDED

SEE INSTALLATION INSTRUCTIONS FOR FURTHER DETAILS

AD	CAH	07/12/07	B	1/16
DR BY	CHK'D	DATE	ISSUE	SCALE

e/one SEWER SYSTEMS

MODEL DH071-93 / DR071-93

NA0050P06

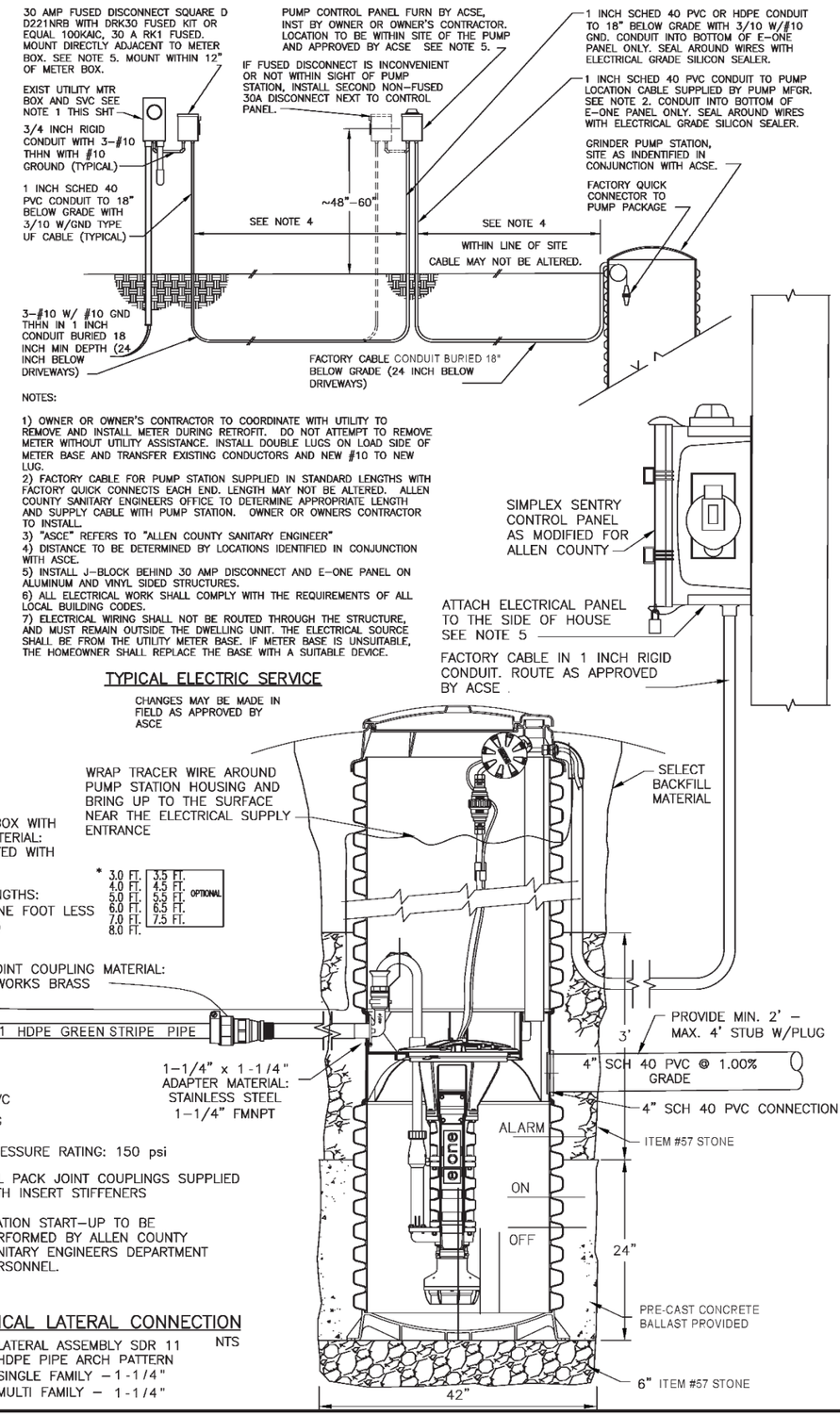

NOTES:

1) OWNER OR OWNER'S CONTRACTOR TO COORDINATE WITH UTILITY TO REMOVE AND INSTALL METER DURING RETROFIT. DO NOT ATTEMPT TO REMOVE METER WITHOUT UTILITY ASSISTANCE. INSTALL DOUBLE LUGS ON LOAD SIDE OF METER BASE AND TRANSFER EXISTING CONDUCTORS AND NEW #10 TO NEW LUG.
2) FACTORY CABLE FOR PUMP STATION SUPPLIED IN STANDARD LENGTHS WITH FACTORY QUICK CONNECTS EACH END. LENGTH MAY NOT BE ALTERED. ALLEN COUNTY SANITARY ENGINEERS OFFICE TO DETERMINE APPROPRIATE LENGTH AND SUPPLY CABLE WITH PUMP STATION. OWNER OR OWNERS CONTRACTOR TO INSTALL.
3) "ASCE" REFERS TO "ALLEN COUNTY SANITARY ENGINEER"
4) DISTANCE TO BE DETERMINED BY LOCATIONS IDENTIFIED IN CONJUNCTION WITH ASCE.
5) INSTALL J-BLOCK BEHIND 30 AMP DISCONNECT AND E-ONE PANEL ON ALUMINUM AND VINYL SIDED STRUCTURES.
6) ALL ELECTRICAL WORK SHALL COMPLY WITH THE REQUIREMENTS OF ALL LOCAL BUILDING CODES.
7) ELECTRICAL WIRING SHALL NOT BE ROUTED THROUGH THE STRUCTURE, AND MUST REMAIN OUTSIDE THE DWELLING UNIT. THE ELECTRICAL SOURCE SHALL BE FROM THE UTILITY METER BASE. IF METER BASE IS UNSUITABLE, THE HOMEOWNER SHALL REPLACE THE BASE WITH A SUITABLE DEVICE.

TYPICAL ELECTRIC SERVICE

CHANGES MAY BE MADE IN FIELD AS APPROVED BY ASCE

SIMPLEX SENTRY

REDUNDANT RUN (HIGH LEVEL)
EXTERNAL VISUAL & AUDIBLE ALARM
EXTERNAL LATCHING MANUAL SILENCE
MANUAL RUN
PUMP RUN INDICATOR
CONFORMAL COATED CIRCUIT BOARD
PADLOCK
NEMA 4X ENCLOSURE ASSEMBLY
CORROSION PROOF THERMOPLASTIC POLYESTER APPROVED BY UL FOR ELECTRICAL CONTROL ENCLOSURE

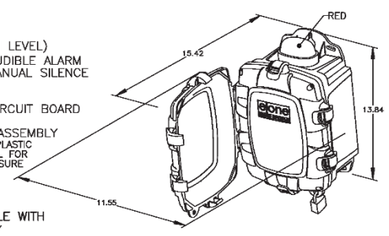

PANEL TO INCLUDE:
GENERATOR RECEPTACLE WITH AUTO TRANSFER RELAY
RUN-TIME/HOUR METER
MAIN SERVICE DISCONNECT BREAKER
DEAD FRONT

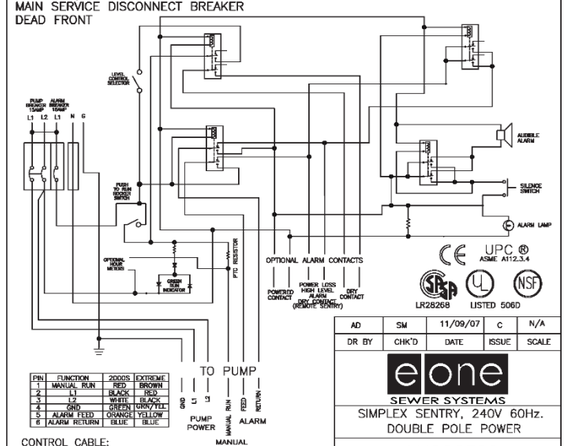

PIN	FUNCTION	2000S	EXTREME
1	MANUAL RUN	RED	BROWN
2	L1	BLACK	RED
3	L2	WHITE	BLACK
4	GRD	GREEN	GRN/YELL
5	ALARM FEED	ORANGE	YELLOW
6	ALARM RETURN	BLUE	BLUE

CONTROL CABLE:
TYPE TC: DIRECT BURIAL, 12AWG, SIX CONDUCTOR

AD	SM	11/09/07	C	N/A
DR BY	CHK'D	DATE	ISSUE	SCALE

e/one SEWER SYSTEMS

SIMPLEX SENTRY, 240V 60Hz. DOUBLE POLE POWER

LM000326

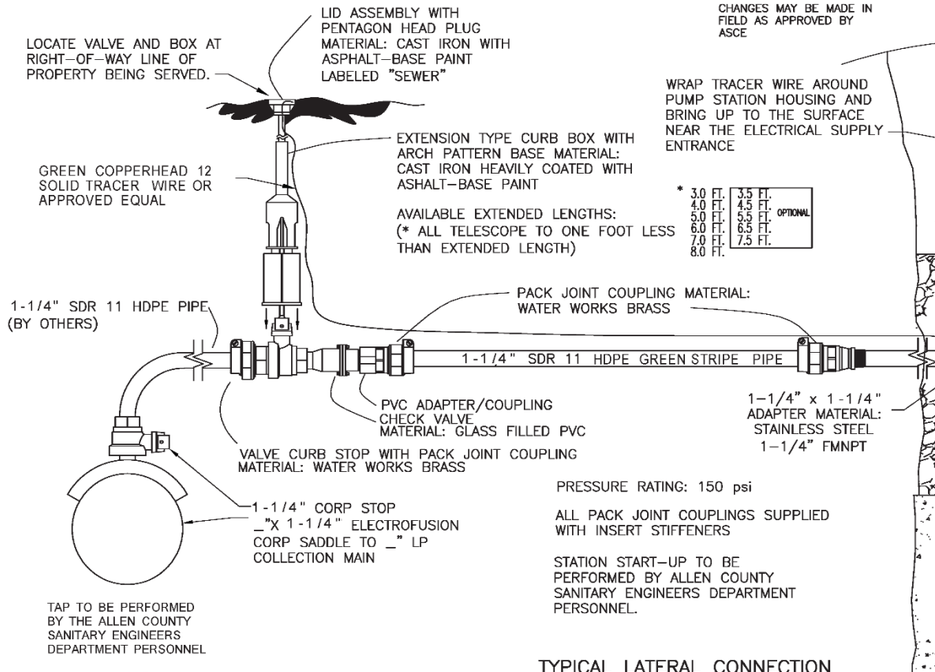

PRESSURE RATING: 150 psi

ALL PACK JOINT COUPLINGS SUPPLIED WITH INSERT STIFFENERS

STATION START-UP TO BE PERFORMED BY ALLEN COUNTY SANITARY ENGINEERS DEPARTMENT PERSONNEL.

TYPICAL LATERAL CONNECTION

NTS

LATERAL ASSEMBLY SDR 11 HDPE PIPE ARCH PATTERN
SINGLE FAMILY - 1-1/4"
MULTI FAMILY - 1-1/4"

AGENCY: SANITARY ENGINEERING DEPARTMENT ALLEN COUNTY, OHIO

PROJECT: SINGLE FAMILY RESIDENTIAL LP SANITARY COLLECTION

SUBJECT: STANDARD DRAWING NO. GPD 1.0

DATE: 05-04-17

DRAWING NO.: 1

D:\eps\ACSE\Standards\GRINDER PUMP DETAILS 1.dwg, DETAIL 22X34, 6/29/2017 8:19:00 AM